NOTES:
1.Rating：2.5A 250VAC UL CUL
2.Contact resistance： 50mΩ Max
3.Insulation resistance：>100MΩ Min 500VDC
4.Dielectric strength：>2000VAC 0.5mA 1 minutes

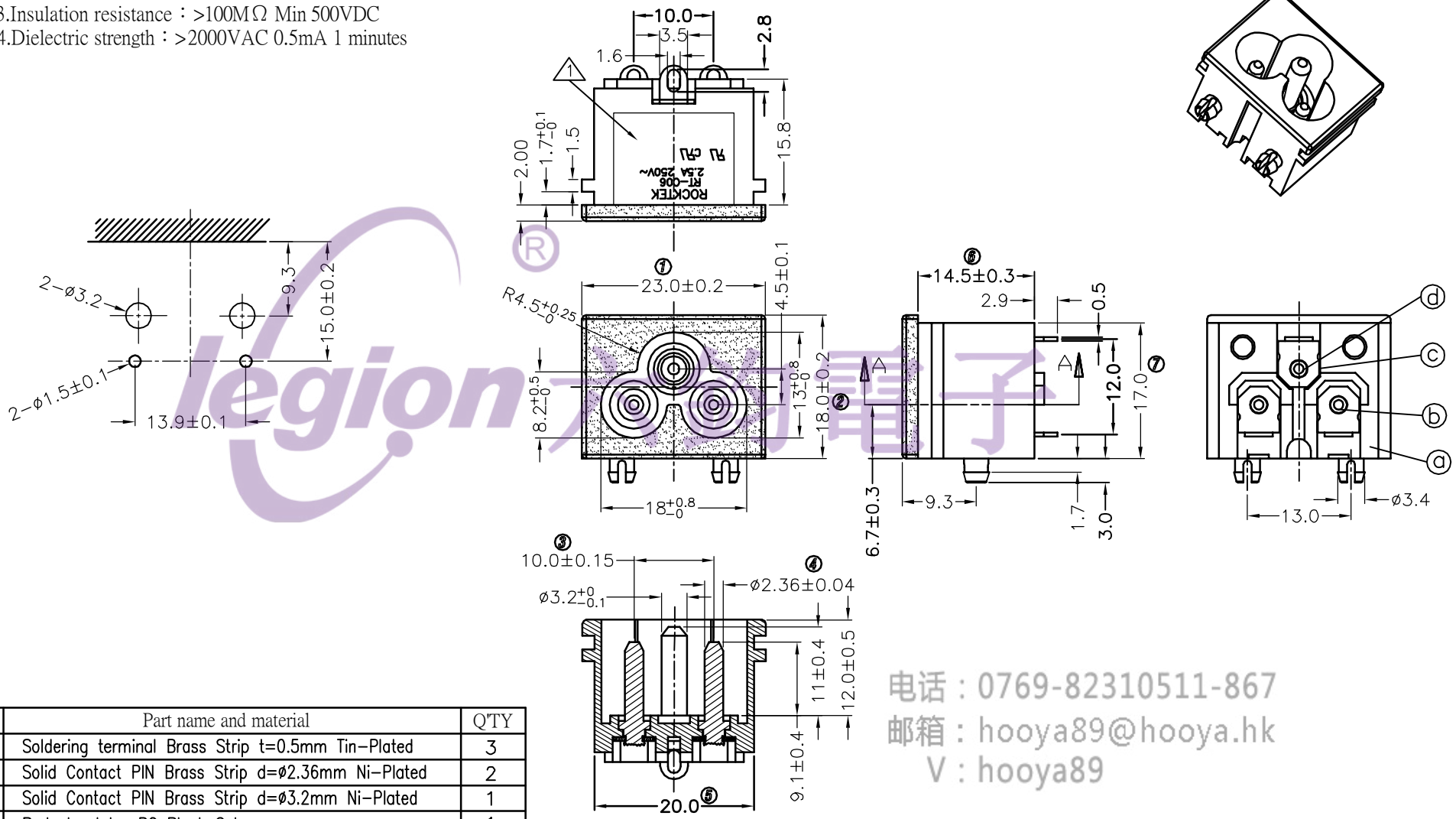

legion 大勇電子 ®

电话：0769-82310511-867
邮箱：hooya89@hooya.hk
V：hooya89

NO.	Part name and material	QTY
d	Soldering terminal Brass Strip t=0.5mm Tin-Plated	3
c	Solid Contact PIN Brass Strip d=ø2.36mm Ni-Plated	2
b	Solid Contact PIN Brass Strip d=ø3.2mm Ni-Plated	1
a	Body Insulator PC Black Color	1

NO	DESCRIPTION	APPROVED	DATE
5	→		
4	→		
3	→		
2	→		
1	取消北欧四国和3C安规	刘美昌	2011. 04. 11

DIMENSIONAL TOLERANCES	
RANGE	TOLERANCE
X	±0.5
X.X	±0.3
X.XX	±0.1
ANGLES	±1°

APPROVED	CHECKED	DESIGN	DRAWN
			TXY

ROCK TEK ELECTRICAL(SHENZHEN) CO.,LTD.

ALL SIZE ARE IN	MM
SCALE	FIT
MAT'L	***
MATERIAL NO.	RT-C06-A1B-AA
DRAWING NO.	WIF106085
REV.	A1